ENERGY TRANSFERS AND CONVERSIONS IN A TURBINE

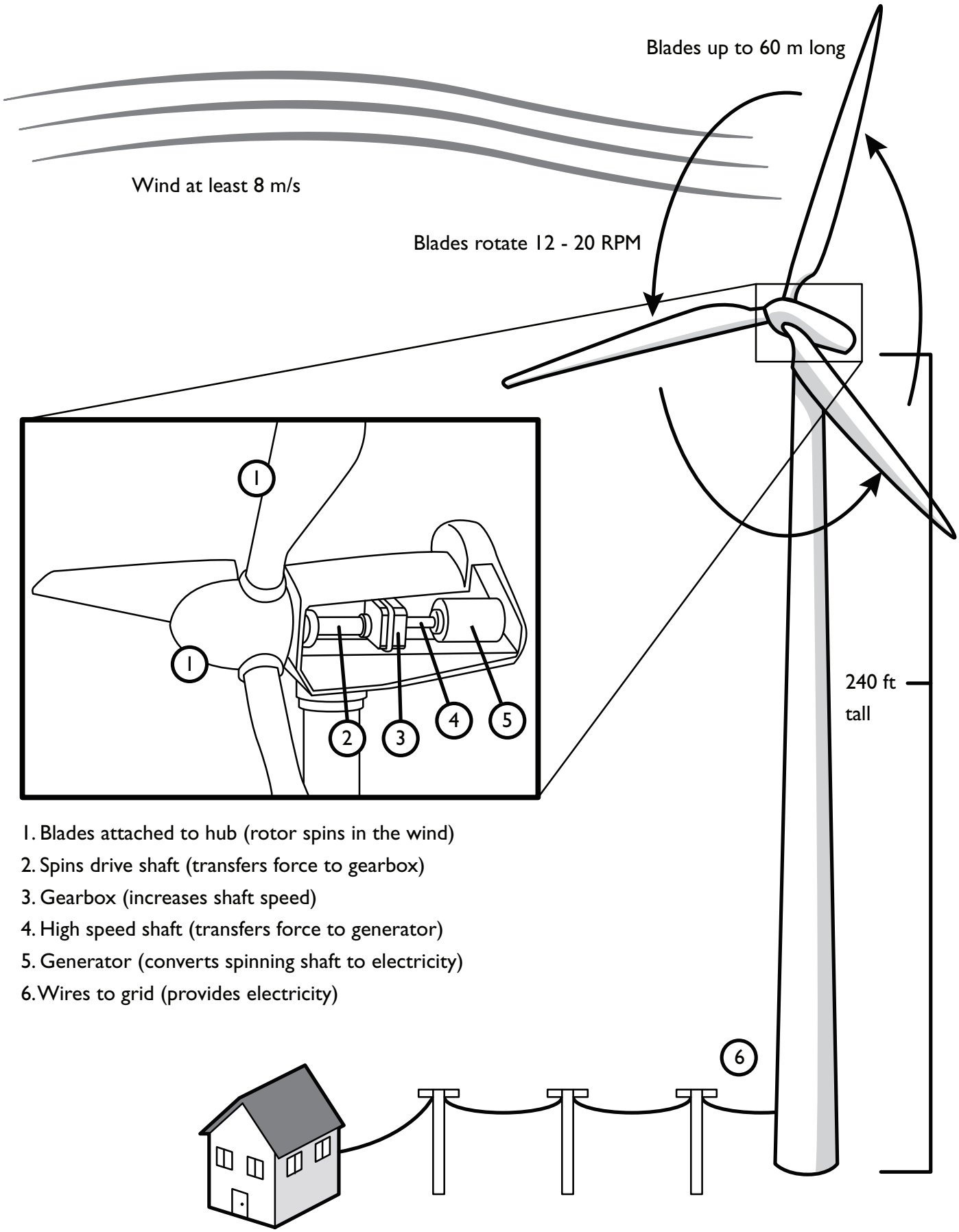

1. Blades attached to hub (rotor spins in the wind)
2. Spins drive shaft (transfers force to gearbox)
3. Gearbox (increases shaft speed)
4. High speed shaft (transfers force to generator)
5. Generator (converts spinning shaft to electricity)
6. Wires to grid (provides electricity)